LAPPSET®

Q01964

FINNO

DATE: 17.12.2008

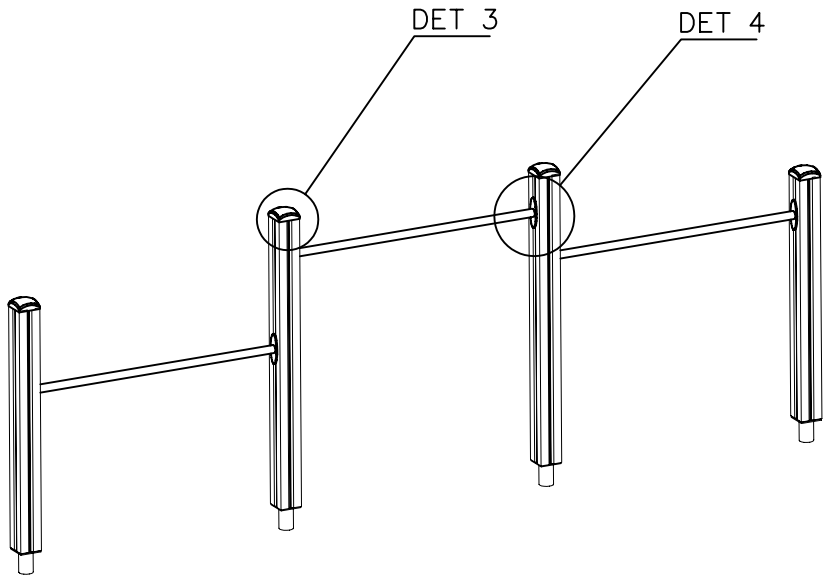

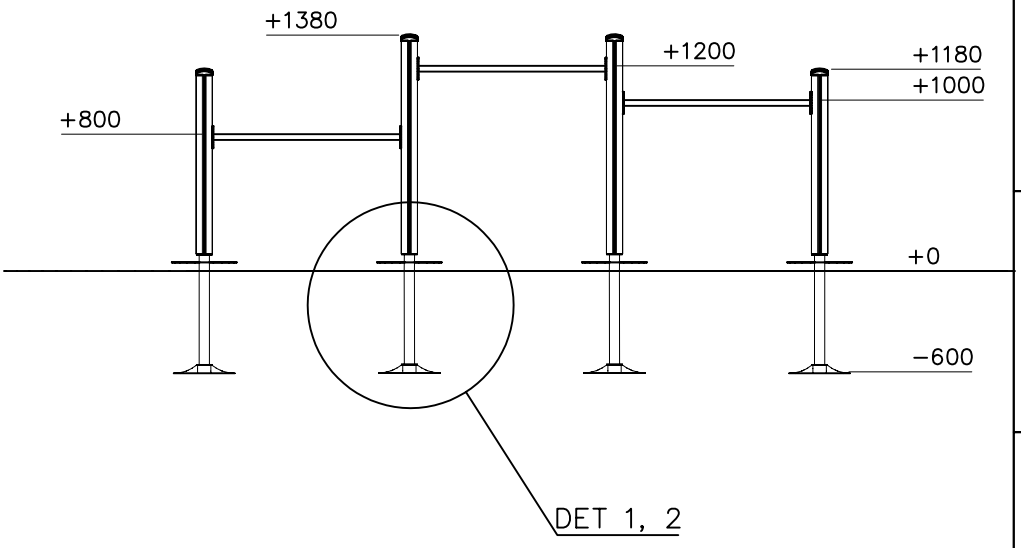

① 701413 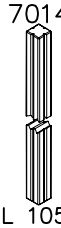 L 1050	PCS 2		② 701416 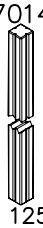 L 1250	PCS 2	
③ 900240 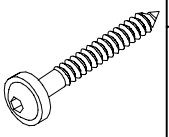 8x70	PCS 12		④ 901785 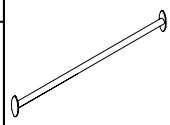 L 1104	PCS 3	
⑤ 905104  M10	PCS 16		⑥ 905138 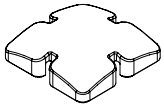 GREY	PCS 4	
⑦ 905196 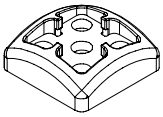 GREY	PCS 4		⑧ 909521 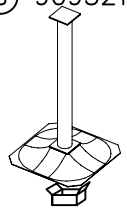	PCS 4	
⑨ 980131  6x60	PCS 16				PCS
	PCS				PCS
	PCS				PCS
	PCS				PCS

Copyright Lappset Group Ltd

LAPPSET®

Q01964

FINNO

DATE: 17.12.2008

DET 1

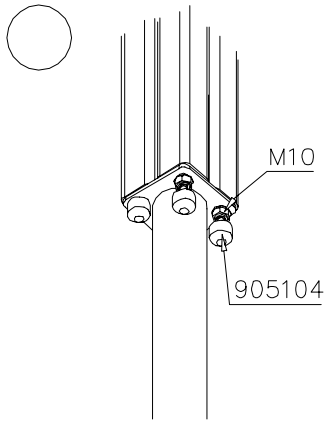

DET 2

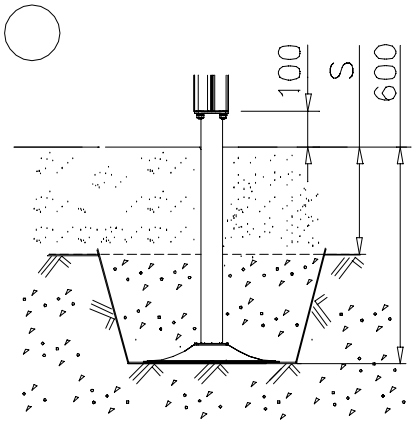

DET 3

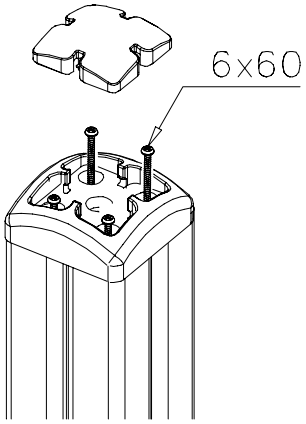

DET 4

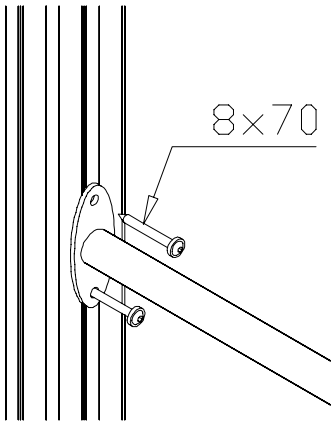

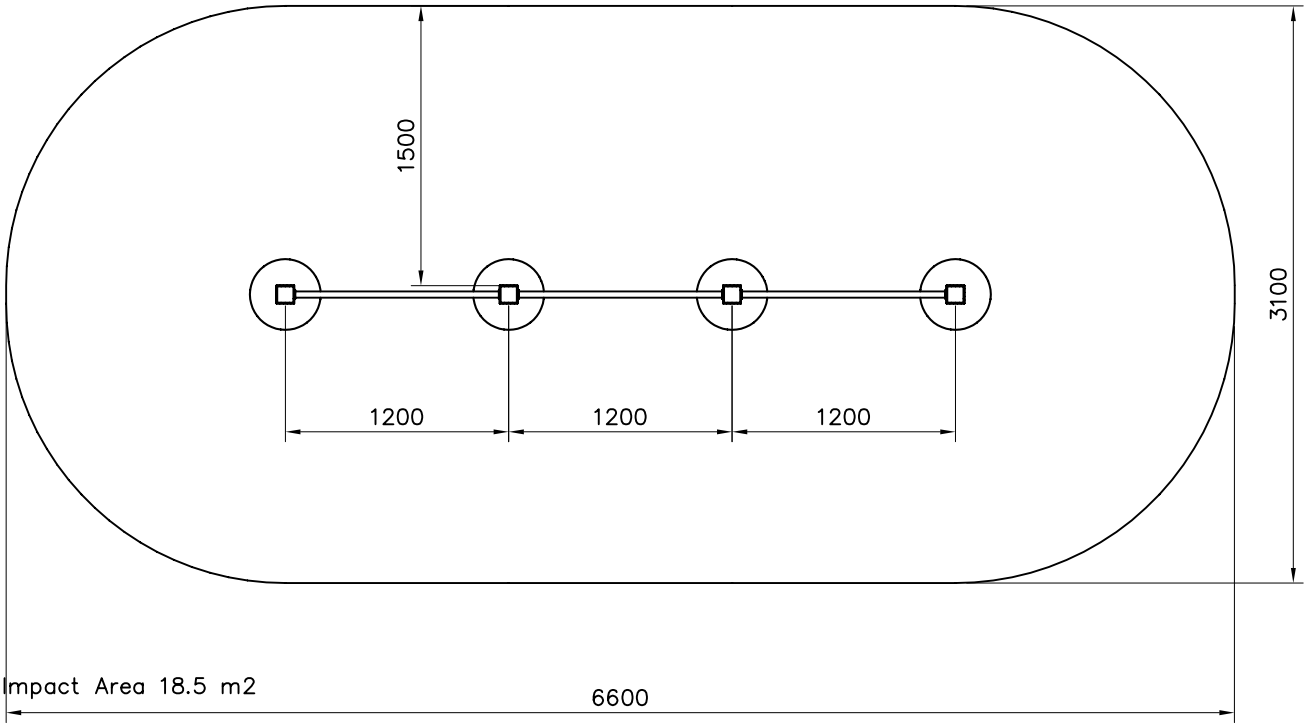

Copyright 1998 Lappset Group Ltd