LAPPSET®

FINNO

ASENNUSOHJE
MONTERINGSANSVISNING
INSTALLATION INSTRUCTION
AUFBAUANLEITUNG
NOTICE D'INSTALLATION

DATE: 9.11.2023

Q10665-4

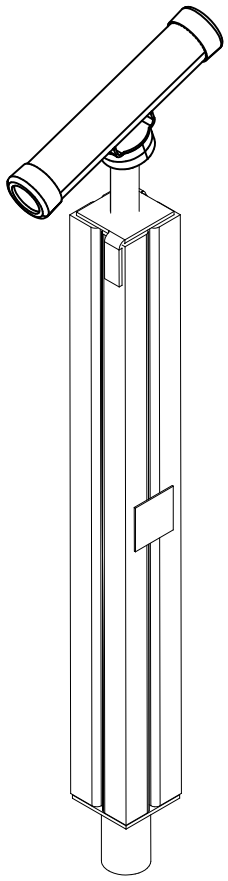

Copyright Lappset Group Ltd

LAPPSET®

FINNO

Q10665-4

DATE: 9.11.2023

702286	PCS	706499	PCS	706531	PCS	707304	PCS	707585	PCS	909511	PCS
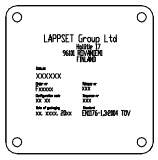	1	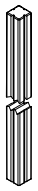	1	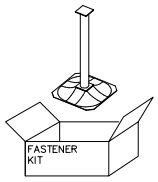	1	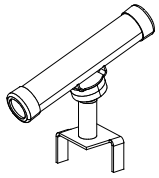	1	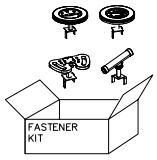	1		1
65x65		93x93x860								90x90x650	
909519	PCS	980114	PCS		PCS		PCS		PCS		PCS
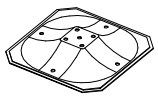	1	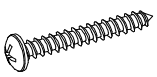	4								
50x380x380		Ø4x20									
	PCS		PCS		PCS		PCS		PCS		PCS
	PCS		PCS		PCS		PCS		PCS		PCS
	PCS		PCS		PCS		PCS		PCS		PCS
	PCS		PCS		PCS		PCS		PCS		PCS
	PCS		PCS		PCS		PCS		PCS		PCS

Copyright Lappset Group Ltd

LAPPSET®

FINNO

Q10665-4

DATE: 9.11.2023

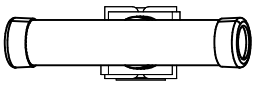

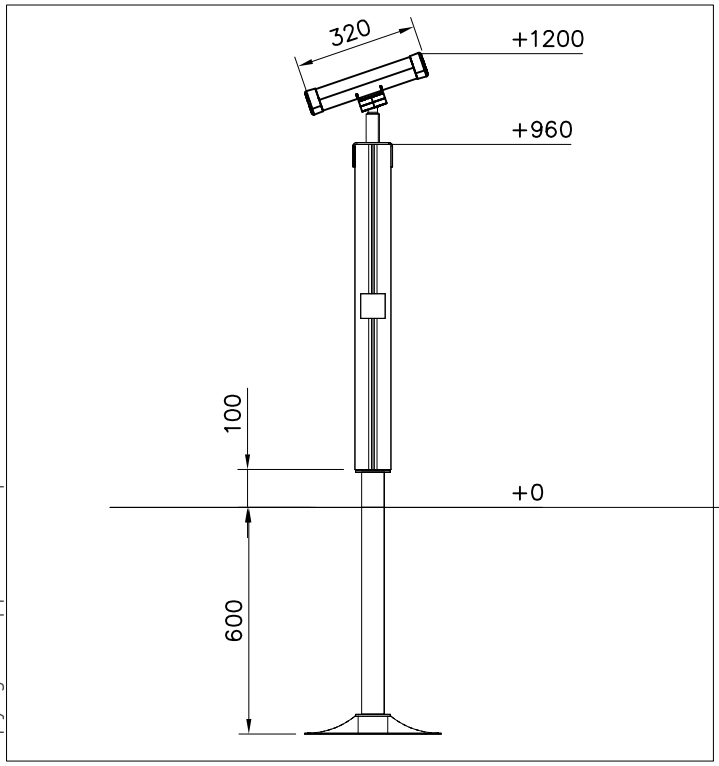

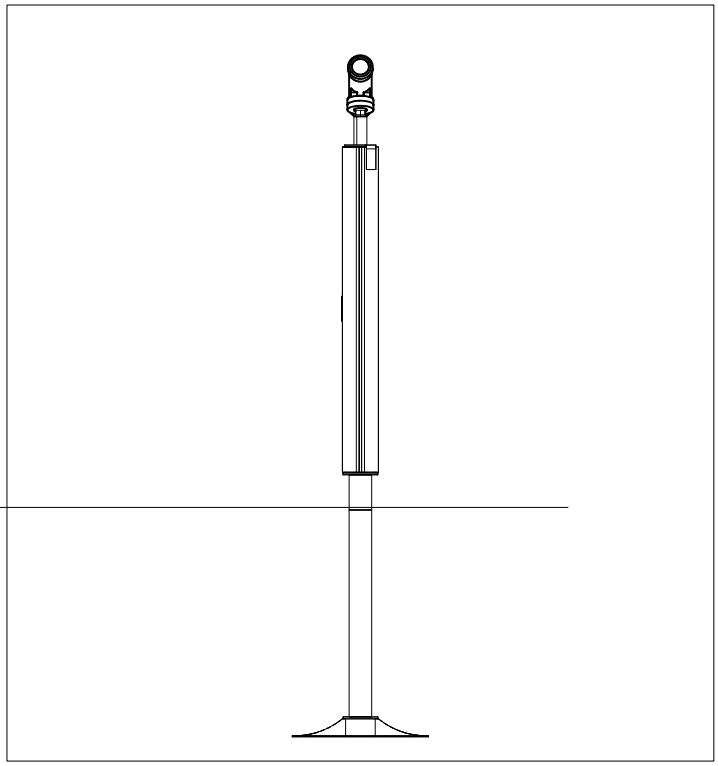

Copyright Lappset Group Ltd

LAPPSET®

FINNO

Q10665-4

DATE: 9.11.2023

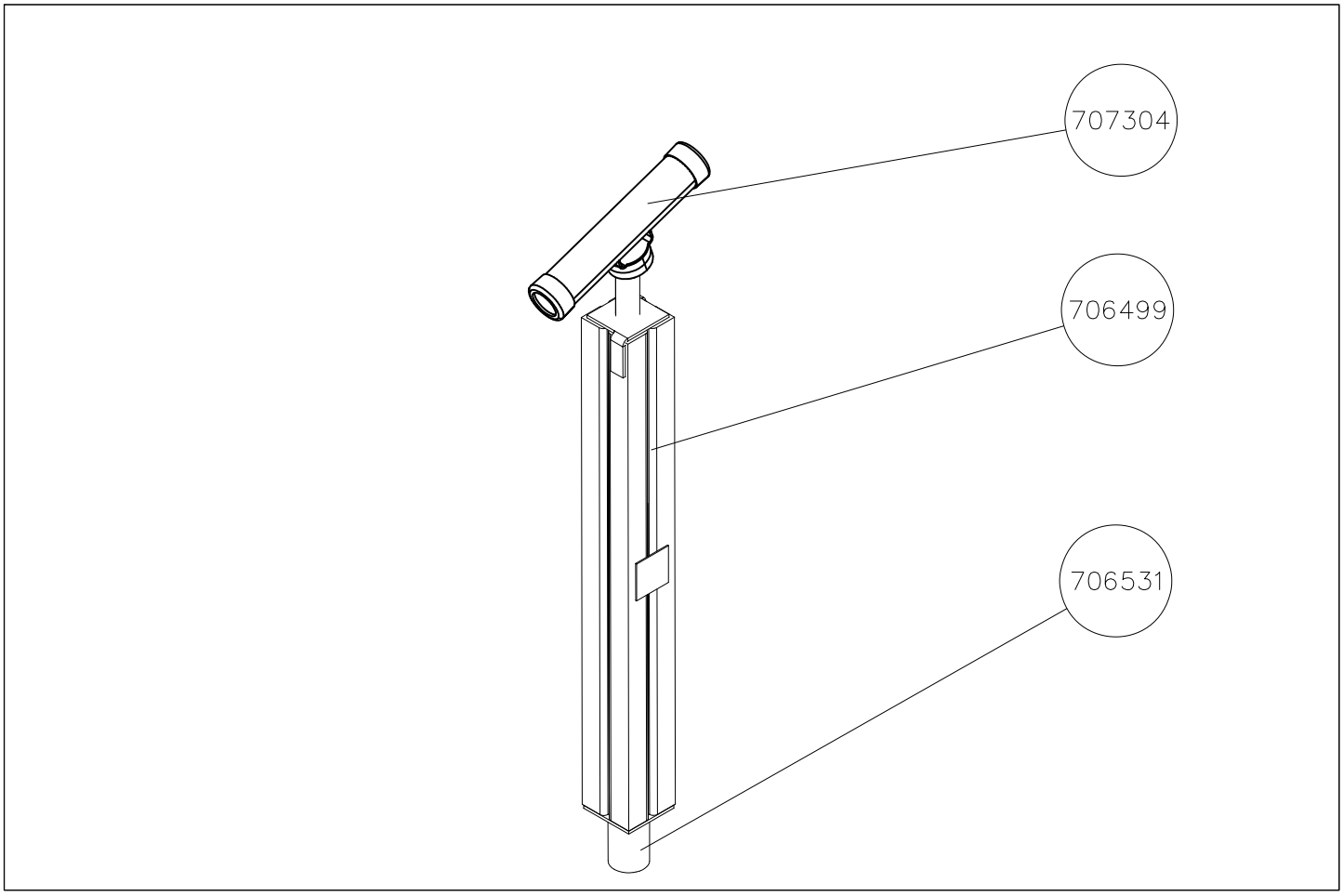

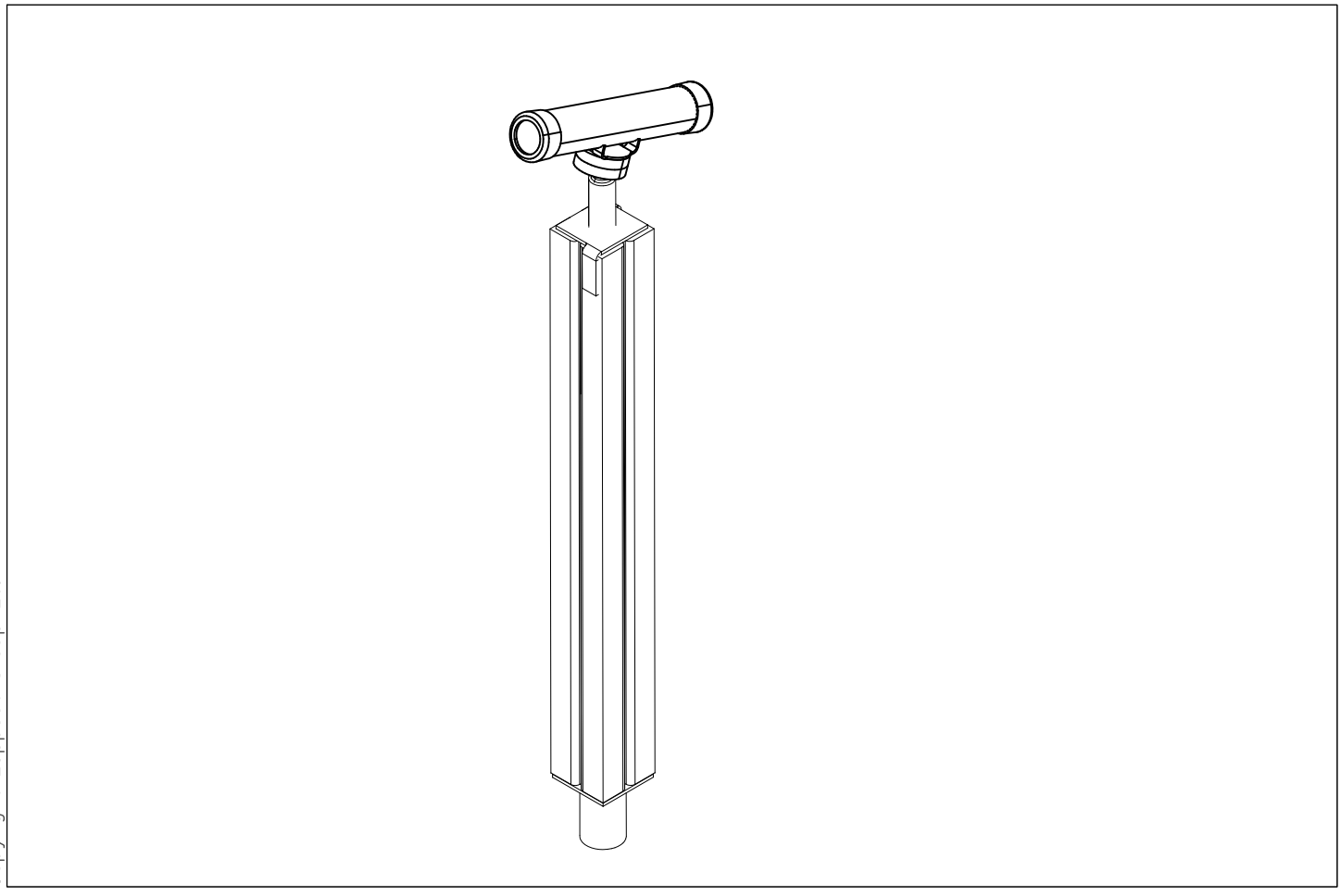

Copyright Lappset Group Ltd