LAPPSET

QFL0860

FLORA

3

DATE: 23.10.2026

702286	PCS	707811	PCS	713653	PCS	900240	PCS	905139	PCS	905197	PCS
	1	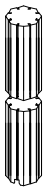	3	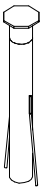	3	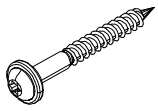	8	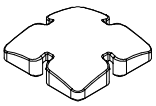	3	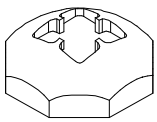	3
65x65		140x140x2420		 L=750		Ø8x70		BLACK		BLACK	
907694-216	PCS	980114	PCS	980131	PCS		PCS		PCS		PCS
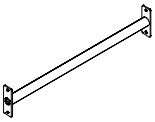	2	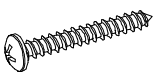	4	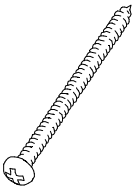	12						
L 704		Ø4x20		6x60							
	PCS		PCS		PCS		PCS		PCS		PCS
	PCS		PCS		PCS		PCS		PCS		PCS
	PCS		PCS		PCS		PCS		PCS		PCS
	PCS		PCS		PCS		PCS		PCS		PCS
	PCS		PCS		PCS		PCS		PCS		PCS

Copyright Lappset Group Ltd

LAPPSET®

FLORA

QFL0860

DATE: 23.10.2026

EN/AS Impact Area 13 m2

Falling Space 13 m2

Max Falling Height 1750 mm

1:50

0 2

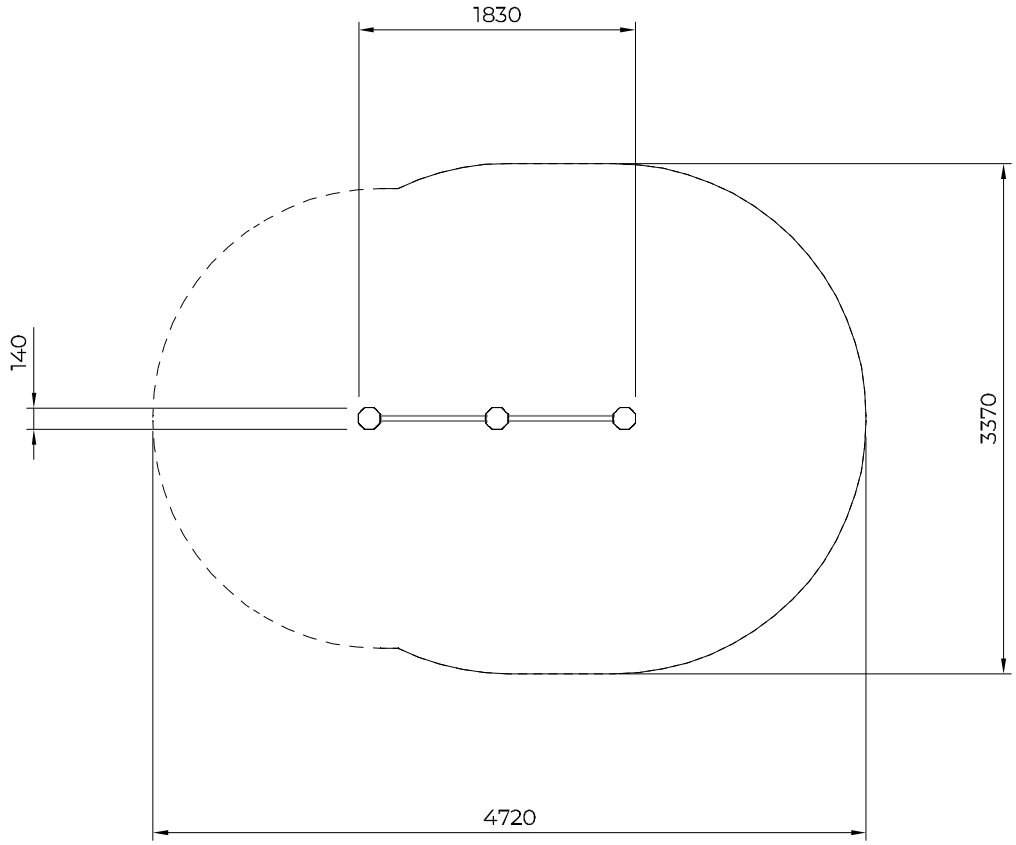

Copyright Lappset Group Ltd

LAPPSET®

FLORA

QFL0860

DATE: 23.10.2026

5.1

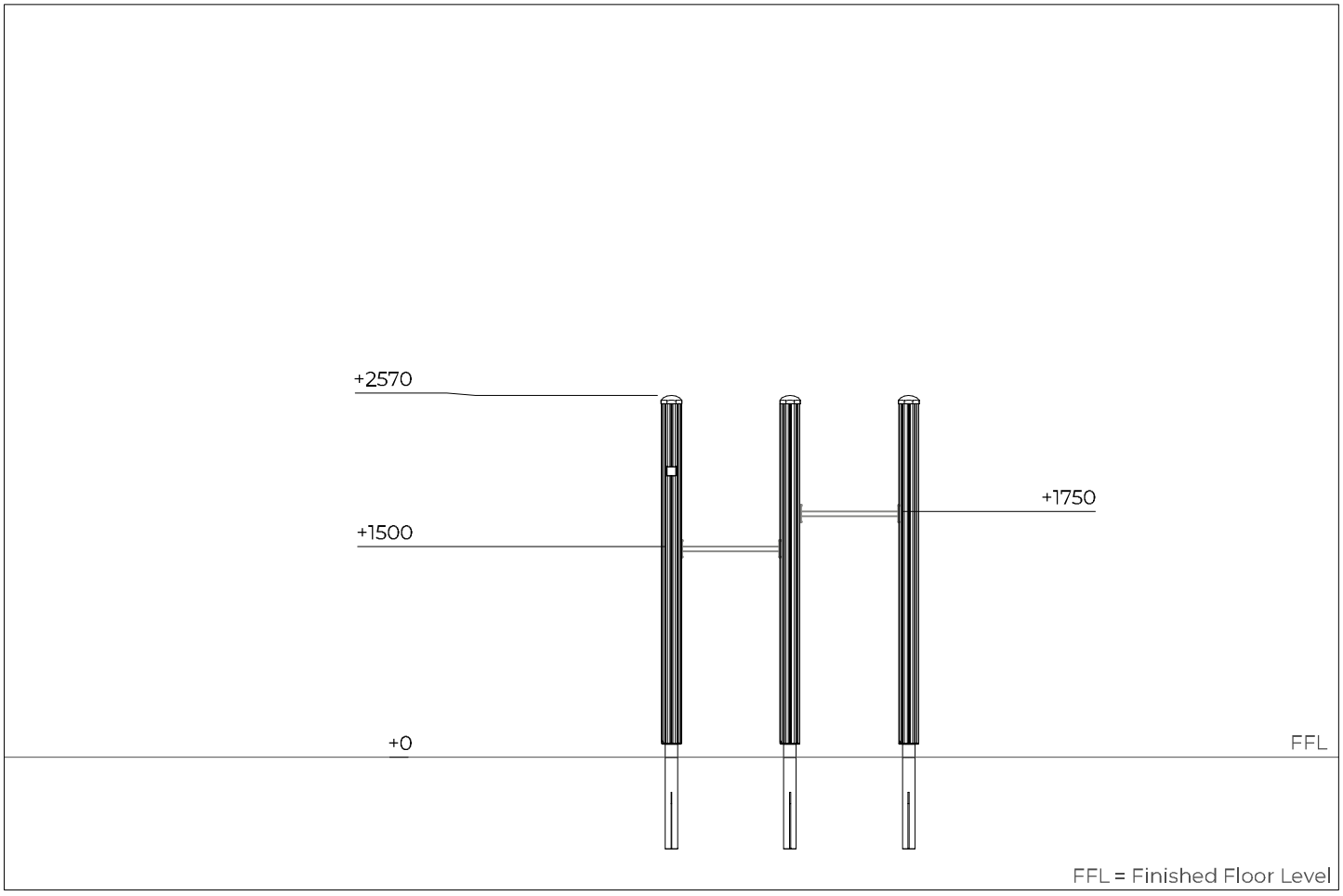

FFL = Finished Floor Level



FFL = Finished Floor Level

Copyright Lappset Group Ltd

LAPPSET

FLORA

QFL0860

DATE: 23.10.2026

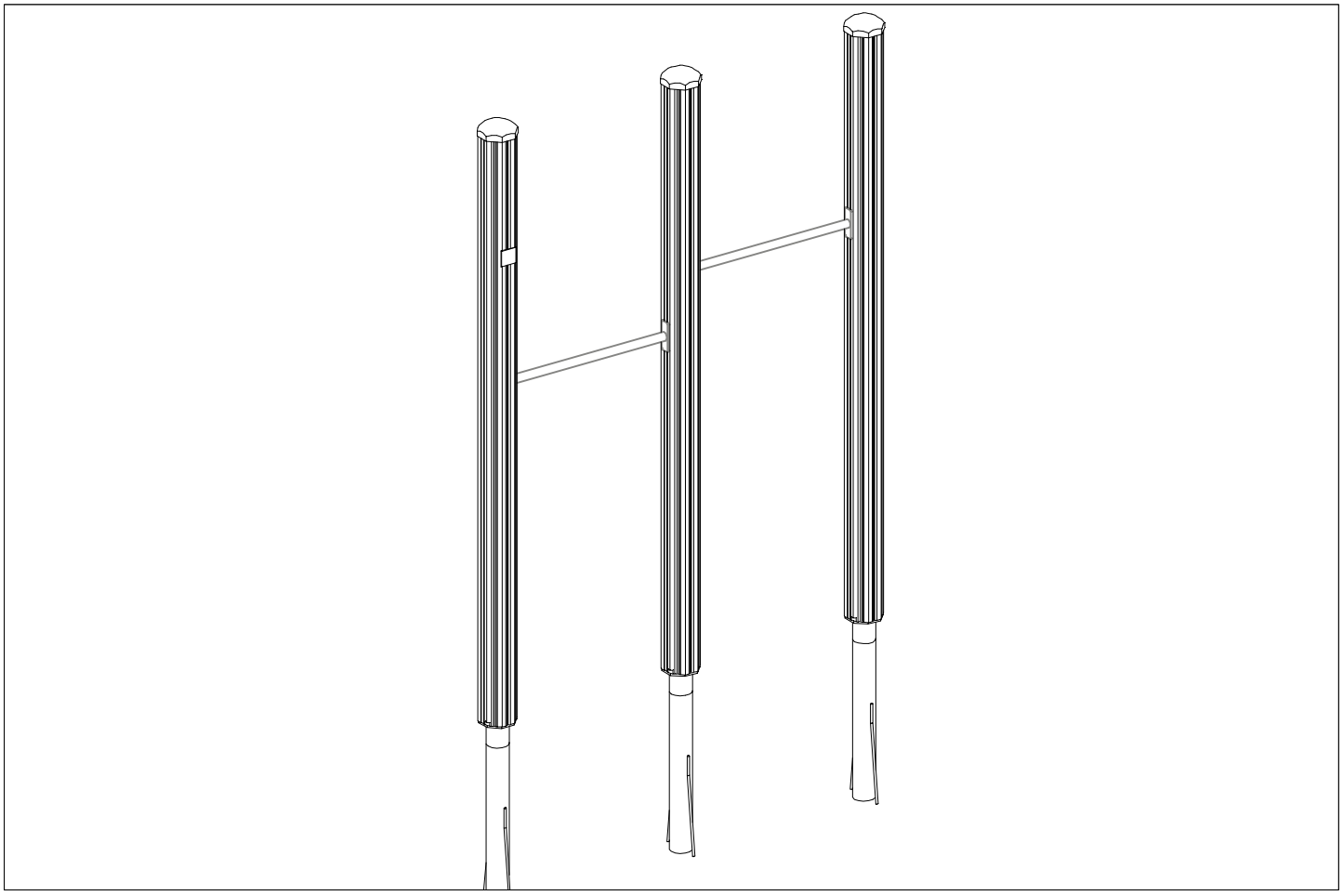

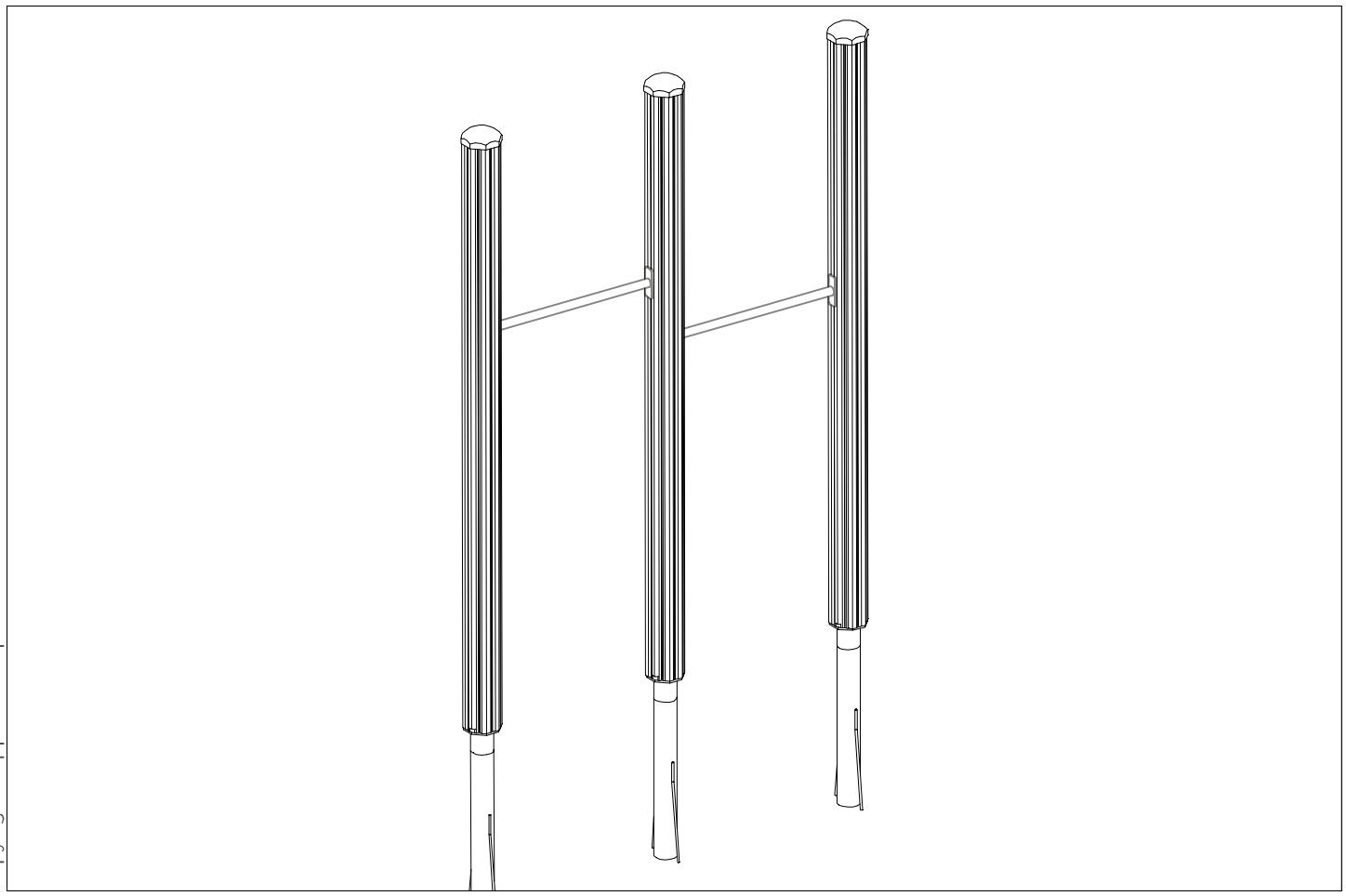

Copyright Lappset Group Ltd